SIDE

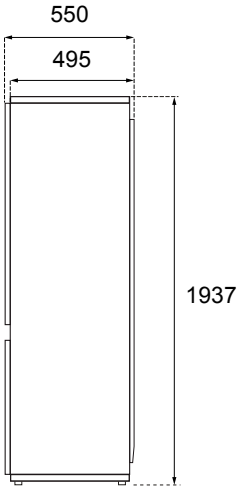

FRONT

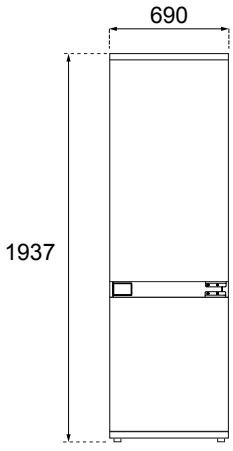

TOP

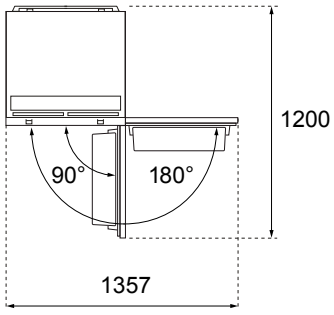

CUTOUT DIMENSIONS

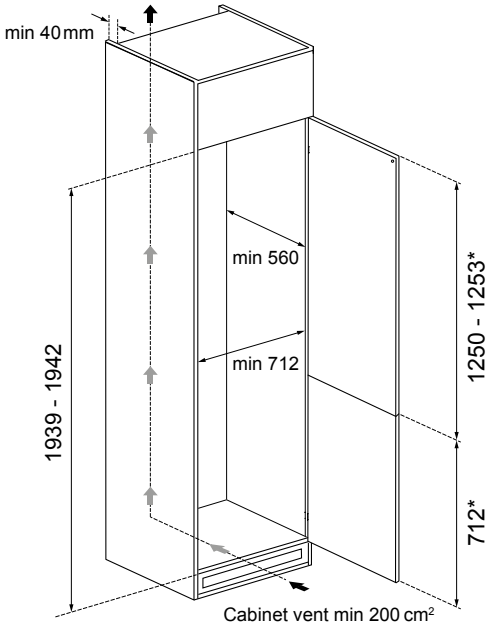

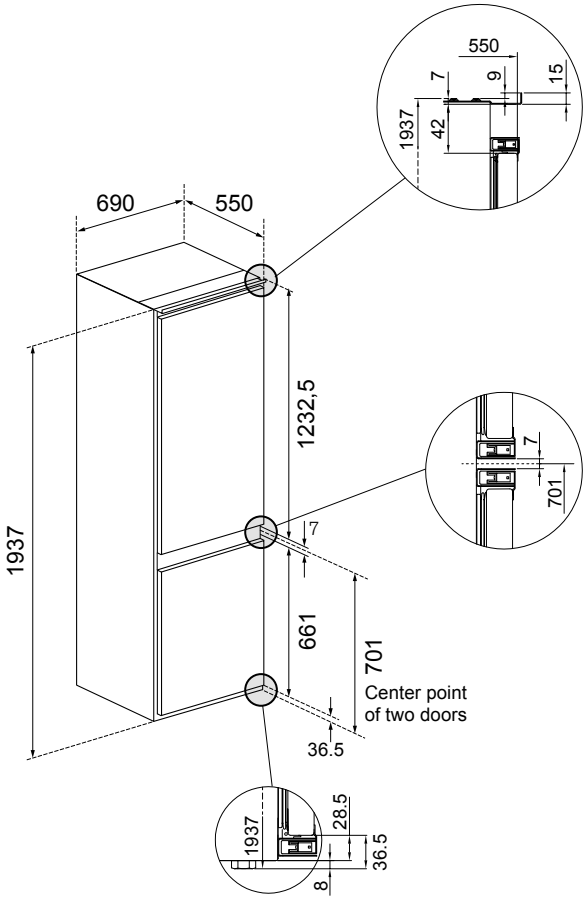

* Indicative panel height, to be adjusted according to cabinet specifications.
The refrigerator is installed on the cabinet base shelf and not on the kitchen floor.

ELECTRICAL CONNECTION

A properly-grounded, electrical receptacle should be installed. A separate circuit breaker servicing only this appliance is recommended. Do not use a multi-purpose socket with other electrical appliances.

INSTALLATION REQUIREMENTS

The max weight for the cabinet panels is 20 kg per panel.